Operating instructions

multiMATIC

VRC 700f/4

AT, BE (de), CH (de), DE

Publisher/manufacturer
Vaillant GmbH
Berghauser Str. 40 ▮ D-42859 Remscheid
Tel. +49 21 91 18-0 ▮ Fax +49 21 91 18-2810
info@vaillant.de ▮ www.vaillant.de

Vaillant

Contents

1 Safety

1.1 Action-related warnings

Classification of action-related warnings

The action-related warnings are classified in accordance with the severity of the possible danger using the following warning signs and signal words:

Warning symbols and signal words

Danger!
Imminent danger to life or risk of severe personal injury

Danger!
Risk of death from electric shock

Warning.
Risk of minor personal injury

Caution.
Risk of material or environmental damage

1.2 Intended use

In the event of inappropriate or improper use, damage to the product and other property may arise.

The product is intended for using an eBUS interface to control a heating installation with heat generators from the same manufacturer.

The radio control, the radio receiver unit and the wireless outdoor temperature sensor must be installed in a location that receives sufficiently high signal. The radio control is not intended to be portable.

Intended use includes the following:

– observance of the operating instructions included for the product and any other system components
– compliance with all inspection and maintenance conditions listed in the instructions.

This product can be used by children aged from 8 years and above and persons with reduced physical, sensory or mental capabilities or lack of experience and knowledge if they have been given supervision or instruction concerning use of the product in a safe way and understand the hazards involved. Children must not play with the product. Cleaning and user maintenance work must not be carried out by children unless they are supervised.

Any other use that is not specified in these instructions, or use beyond that specified in this document shall be considered improper use. Any direct use in industrial or commercial processes is also deemed to be improper.

Caution.

Improper use of any kind is prohibited.

1.3 General safety information

1.3.1 Danger caused by improper operation

Improper operation may present a danger to you and others, and cause material damage.

- Carefully read the enclosed instructions and all other applicable documents, particularly the "Safety" section and the warnings.
- Only carry out the activities for which instructions are provided in these operating instructions.

1.3.2 Risk of injury caused by batteries

If the batteries are recharged contrary to instructions, there is a risk of serious personal injury.

- Do not recharge the batteries.

1.3.3 Risk of material damage

- Do not short-circuit the connection contacts in the product's battery compartment.

1.3.4 Risk of material damage caused by acid

- Remove any dead batteries from the product and dispose of these properly.
- Remove the batteries if you intend to store the product and not use it for an extended period.

1.3.5 Risk of material damage caused by frost

- Ensure that the heating installation always remains in operation during freezing conditions and that all rooms are sufficiently heated.

- If you cannot ensure the operation, have a competent person drain the heating installation.

2 Notes on the documentation

2.1 Observing other applicable documents

► You must observe all operating instructions enclosed with the system components.

2.2 Storing documents

► Keep this manual and all other applicable documents safe for future use.

2.3 Validity of the instructions

These instructions apply only to:

VRC 700f/4 – article number

Austria	0020218359
Belgium	0020231557
Germany	0020218359
Switzerland	0020231557

2.4 Nomenclature

The following terms are used for simplification:

– System control: This refers to the **VRC 700f/4** wireless system control.
– Remote control: This refers to the **VR 91f** wireless remote control.
– Outdoor temperature sensor: This refers to the wireless outdoor temperature sensor.

2.5 Function availability

The functions described in these operating instructions are not available for all system configurations.

The system control only shows the functions that are available in the system configuration you have installed.

3 Product description

3.1 Design of the product

3.1.1 Radio receiver unit

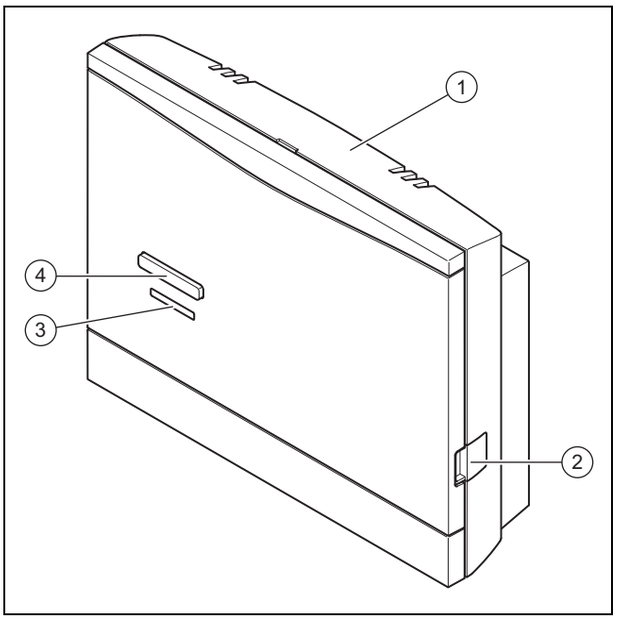

1	Wall-mounting base	3	LED status display
2	Diagnostics socket	4	Teach-in button

3.1.2 Radio controller

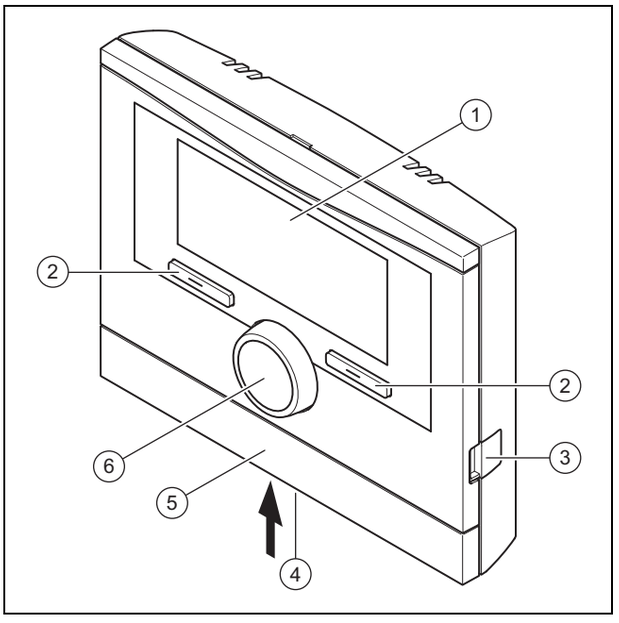

1	Display	4	Battery compartment
2	Selection button	5	Wall-mounting base cover
3	Diagnostics socket	6	Rotary knob

3.1.3 Radio outside temperature sensor

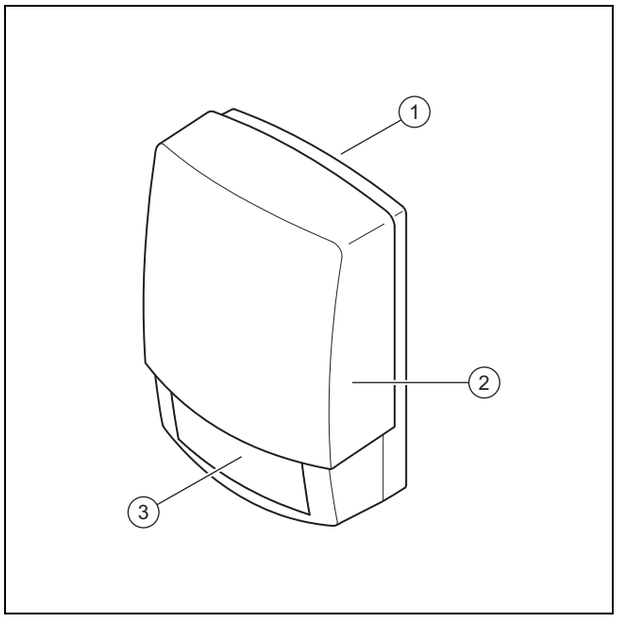

1	Wall-mounting base	3	Solar cell
2	Radio outside temperature sensor		

3.2 Main function

The system control is a weather-compensated system control with an outdoor temperature sensor installed in the open air.

The system control is connected to the outdoor temperature sensor and the heat generator via the radio receiver unit. The system control radio-controls the heating installation and other connected components, e.g. the domestic hot water generation for a connected domestic hot water cylinder or the ventilation of a connected ventilation unit.

3.2.1 Heating

The outdoor temperature sensor measures the outdoor temperature and forwards the values to the system control. When the outdoor temperature is low, the system control increases the flow temperature of the heating installation. If the outdoor temperature increases, the system control reduces the flow temperature. The system control responds to the fluctuations in the outdoor temperature and uses the flow temperature to ensure that the room temperature remains at the desired temperature.

3.2.2 Cooling

The room temperature sensor measures the room temperature and sends the data to the system control. If the room temperature is higher than the desired temperature that is set, the system control switches cooling on.

3.2.3 Ventilation

Using a controlled exchange of air, the ventilation unit ensures that the living rooms are ventilated and aerated. The system control controls the air volume flow via the ventilation levels that are set.

3.2.4 Domestic hot water generation

A temperature sensor measures the temperature of the water in the domestic hot water cylinder and forwards the values to the system control. If the temperature lies below the set value, the system control increases the temperature in the domestic hot water circuit and therefore heats up the water to the set domestic hot water temperature.

3.2.5 Circulation

The secondary return pipe is connected to the domestic hot water pipe and forms a circuit with the domestic hot water cylinder. The circulation pump pumps the domestic hot water through the domestic hot water pipe, either continuously or on a time-controlled basis. This means that domestic hot water is available at the draw-off points.

3.3 Zones

A building is divided into several zones if the heat demand differs between different sections of the building.

– If underfloor heating and radiator heating are installed in a house.
– If a house contains more than one independent residential unit.

If more than one zone is available, the system control controls the available zones.

3.4 Hybrid manager

If a heat pump and an additional boiler are connected, you can use the hybrid manager. If there is a heat demand, the hybrid manager picks the heat generator that is more cost-efficient. The hybrid manager decides which heat generator to operate based on the tariffs that are set in relation to the heat demand.

To ensure that the heat pump and the boiler can work effectively and in synch with one another, the tariffs (→ Page 16) must be set correctly. If the tariffs are set incorrectly, this results in increased costs.

3.5 Frost protection function

The frost protection function protects the heating installation and flat from frost damage. The frost protection function monitors the outdoor temperature.

If the outdoor temperature

– falls below 4 °C, the system control switches the heat generator on after a frost protection delay time, and brings the target room temperature to 5 °C.
– rises above 5 °C, the system control does not switch the heat generator on but monitors the outdoor temperature.

Note
The competent person can set the frost protection delay time.

3.6 Avoiding moisture and mould damage

In heavily insulated rooms that only allow a small exchange of air, moisture and mould damage may occur.

- Ventilate the rooms regularly by opening windows and activate the **Ventilation boost** function once to save energy.

Conditions: Ventilation unit is connected

- Do not disconnect the ventilation unit from the power mains.
- Clean and service the ventilation unit in accordance with the instructions for the ventilation unit.

3.7 Preventing malfunctions

- Ensure that room air can circulate freely around the system control, and that the system control is not covered by furniture, curtains or other objects.
- Ensure that all thermostatic radiator valves in the room where the system control is fitted are fully open.

3.8 Data plate

The data plate is located on the rear of the system control underneath the unit mounting bracket.

The data plate contains the following information:

Information on the data plate	Meaning
Serial number	for identification; 7th to 16th digits = product article number
VRC	Product designation
V	Rated voltage
mA	Rated current
	Read the instructions
LR06	Battery type designation
T60	Max. permitted environmental temperature: 0 to 60 °C

3.9 Serial number

You can call up the serial number to the display under **Menu** → **Information** → **Serial number**. The 10-digit article number is located in the second line.

3.10 CE marking

The CE mark shows that the products comply with the basic requirements of the applicable guidelines as stated on the data plate.

The manufacturer hereby declares that the type of radio equipment that is described in these instructions complies with Directive 2014/53/EU. The complete text for the EU Declaration of Conformity is available at: http://www.vaillant-group.com/doc/doc-radio-equipment-directive/.

4 Operation

4.1 Operating structure

4.1.1 Adjustment and display levels

The product has two adjustment and display levels.

The end user level contains information and setting options that you require as the end user.

The installer level is reserved for the competent person. It is protected by a code. Only competent persons may change any settings in the installer level.

End user level (→ Page 23)

4.1.2 Menu structure design

The menu structure consists of several selection levels and a setting level.

You can always use the selection button **Menu** to access selection level 1 from the basic display.

You can use the selection button **Op. mode** to directly access the setting level **Operating mode**.

The lowest level is always the setting level.

4.1.3 Selection level

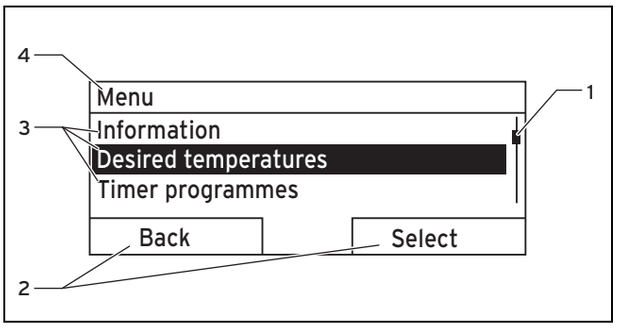

1	Scroll bar	3	Selection level list entries
2	Current functions of the selection buttons	4	Current function or selection level

The scroll bar **(1)** only appears if there are more list entries than can be shown at once on the display.

4.1.4 Setting level

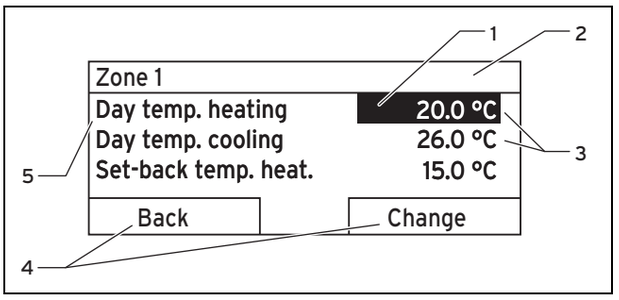

1	Current selection	4	Current functions of the selection buttons
2	Current selection level	5	Setting level
3	Values		

In the setting level, you can select the values you want to read or change.

The system control must retrieve the values from the radio receiver unit first, which can take up to 2 seconds. During that time, the display shows dashes (--) instead of values.

4.1.5 Soft key function for the selection buttons

Both selection buttons have a soft key function, i.e. different functions may be assigned to the selection buttons. If, for example, you press the left-hand selection button, the current function switches from **Menu** to **Back**.

4.2 Basic display

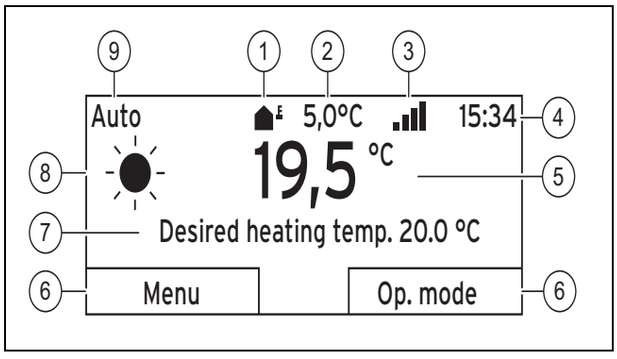

1	Symbol for the outdoor temperature sensor	6	Function of the selection buttons
2	Outside temperature	7	Desired setting
3	Reception strength	8	Symbol for **Auto** operating mode
4	Time	9	Mode for the current operating mode
5	Room temperature		

The basic display appears:

- Depending on which level you are in, you must press the left-hand selection button several times.
- If the system control is in a selection level or setting level and you do not operate the system control for more than 5 minutes.
- If you press one of the selection buttons or turn the rotary knob when the display is switched off.

The display switches off if you do not operate the system control for more than 10 minutes.

4.2.1 Preferred zone in the basic display

If your heating installation has several zones, the competent person sets the zone whose values are to appear in the basic display.

4.2.2 Preferred operating mode in the basic display

If your heating installation is designed for two of the three operating modes (heating, cooling or ventilating), you can switch the basic display to the required operating mode.

Setting the preferred display (→ Page 16)

4.2.3 Information in the basic display

The basic display shows the most important current settings and values for the heating installation.

Various information may appear in the basic display. This depends on which operating mode you give preference to in the basic display and the mode that this operating mode is in.

4.2.3.1 Basic display for the Heating operating mode

Mode	Time periods	Symbol	Information field
Auto	On	☀	**Desired heating temp. appears:** – The system control maintains the temperature at the desired level. **Empty line appears:** – The system control does not request any heating energy.
	Off	☾	
Day			
Set-back			
off			Empty line

4.2.3.2 Basic display for the Cooling operating mode

Mode	Time periods	Symbol	Information field
Auto	On	☀	**Desired cooling temp.**
	Off	☾	Empty line
Day			**Desired cooling temp.**
off			Empty line

4.2.3.3 Basic display for the Ventilation operating mode

Mode	Time periods	Symbol	Information field
Auto	On	☀	**Max. vent. stage**
	Off	☾	**Max. vent. stage**
Day			**Ventilation stage**
Set-back			**Ventilation stage**

4.2.3.4 Basic display for the Manual cooling advanced function

Mode	Time periods	Information field
Activated	On	**Desired cooling temp.**
	Off	Empty line

4.3 Operating concept

The system control is operated using two selection buttons and a rotary knob.

You can use the selection buttons to do the following:

- Navigate through the selection levels and the setting level in the menu structure.
- Select a set value.
- Confirm a set value.
- Navigate to the operating modes.
- Cancel changing a set value.

You can use the rotary knob to do the following:

– Navigate through the list entries for a selection level.
– Select a selection level or setting level.
– Change a selected set value.

The display shows an element that is highlighted by white writing on a black background. A flashing, highlighted value means that you can change the value.

If you do not operate the system control for more than 10 seconds, the background lighting switches off.

If you do not operate the system control during a period of more than 5 minutes, the basic display appears again.

If you do not operate the system control for more than 60 seconds, the system control becomes inoperative and dashes (--) appear on the display instead of values.

4.3.1 Using the rotary knob to make settings in the basic display

If the display shows the basic display, you can use the rotary knob to change the setting for the desired temperature or ventilation level.

The setting that you change depends on selecting the preferred display in the basic display, the selected operating mode and the set mode for the operating mode.

4.3.1.1 Desired temperature in the Heating operating mode

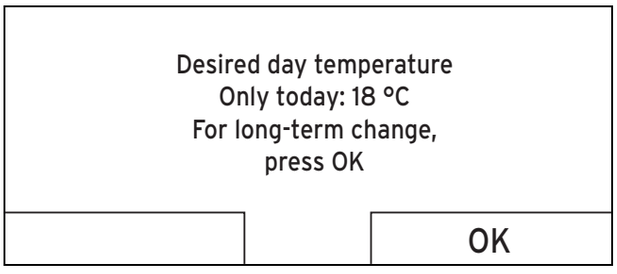

Mode	Time periods	Effect
Auto	On	Switch to another display view with the request: – Permanent change to the **Day temp. heating** – Change to the **Day temp. heating** for six hours
	Off	Direct change to the **Set-back temp. heat.** for six hours
Day		Switch to another display view with the request: – Permanent change to the **Day temp. heating** – Change to the **Day temp. heating** for six hours
Set-back		Direct change to the **Set-back temp. heat.** for six hours
off		None

4.3.1.2 Desired temperature in the Cooling operating mode

Mode	Time periods	Effect
Auto	On	Direct permanent change to the **Day temp. cooling**
	Off	None
Day		Direct permanent change to the **Day temp. cooling**
off		None

4.3.1.3 Ventilation level in the Ventilation operating mode

Mode	Time periods	Effect
Auto	On	Direct permanent change to the **Max. vent. stage: Day**
	Off	Direct permanent change to the **Max. vent. stge: Night**
Day		Direct permanent change to the **Max. vent. stage: Day**
Set-back		Direct permanent change to the **Max. vent. stge: Night**

4.3.1.4 Desired temperature in the Manual cooling advanced function

Mode	Time periods	Effect
Activated	On	Direct permanent change to the **Day temp. cooling**
	Off	None

4.3.1.5 Using the rotary knob to make settings with no effect

You cannot influence the following advanced functions by turning the rotary knob:

– **System OFF active**
– **Cylinder boost**
– **Party function**
– **1 day at home**
– **Days at home scheduling**
– **1 day away from home**
– **Days away from home scheduling**
– **Ventilation boost**
– **Screed-drying function**

4.3.2 Example, changing the display contrast

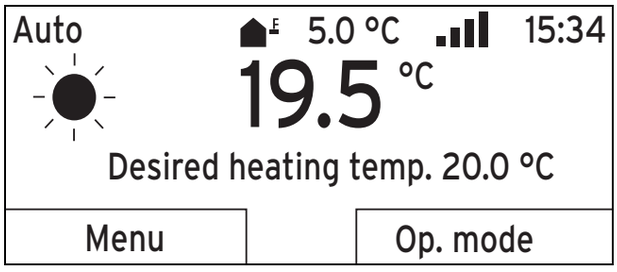

1. Press the left-hand selection button **Back** until the basic display appears in the display.
2. Press the left-hand selection button **Menu**.
   ◁ The system control switches to selection level 1.

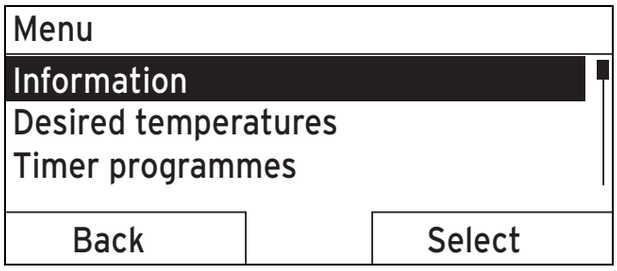

3. Turn the rotary knob until the list entry **Basic settings** is highlighted.

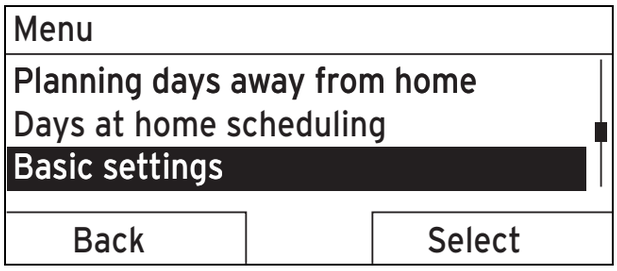

4. Press the right-hand selection button **Select**.
   ◁ The system control switches to selection level 2.

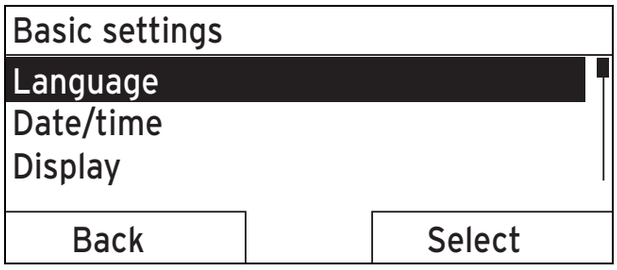

5. Turn the rotary knob until the list entry **Display** is highlighted.

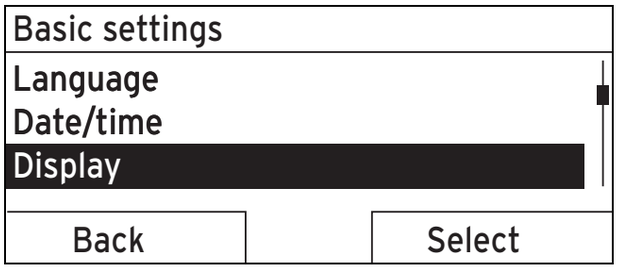

6. Press the right-hand selection button **Select**.
   ◁ The system control switches to setting level **Display**. The adjustable value for the **Display contrast** is highlighted.

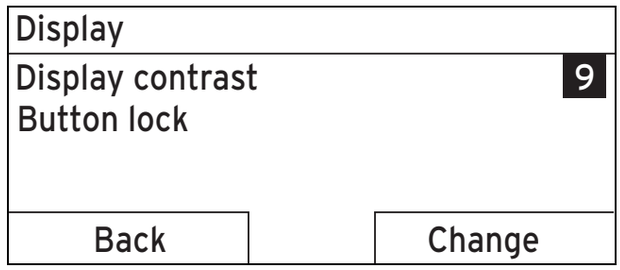

7. Press the right-hand selection button **Change**.
   ◁ The highlighted value flashes.

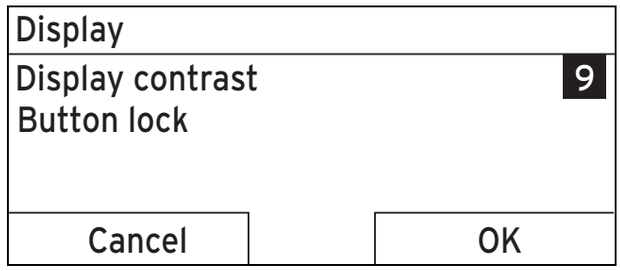

8. Turn the rotary knob to change the value.

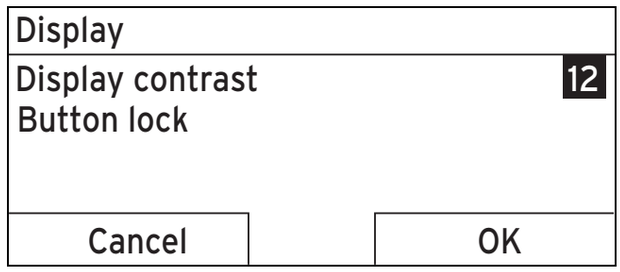

9. Press the right-hand selection button **OK** to confirm the change.
   ◁ The system control has saved the changed value.
10. Press the left-hand selection button **Back** repeatedly to go back to the basic display.

5 Operating and display functions

Note
The functions described in this section are not available for all system configurations.

Overview of operating modes and the end user level

Operating modes (→ Page 23)

End user level (→ Page 23)

The path details given at the start of each function description indicate how you reach this function in the menu structure.

The description of the functions for **ZONE1** also applies for all available zones.

5.1 Information

5.1.1 Reading the system status

Menu → Information → System status

– Under **System status**, there is a list containing information that provides an overview of the current system status, and current settings that you can change there.

5.1.1.1 System

Menu → Information → System status → Fault status

– If no maintenance is required and no faults have occurred, the value **No fault** appears for **Fault status**.
If maintenance is required or a fault has occurred, the value **Fault list** is shown for **Fault status**. In this case, the right-hand selection button is for the **Display** function. If you press the right-hand selection button **Display**, the list of fault messages appears on the display.

Menu → Information → System status → Green IQ

– You can use the function if the connected heat generator **Green IQ** is capable of this.

On: The operating mode controls the heat generator in the heating and cylinder charging mode so that a maximum gross calorific value utilisation is achieved.

Off: The operating mode is switched off.

Menu → Information → System status → Water pressure

– You can use this function to read the water pressure of the heating installation.

Menu → Information → System status → System status

– You can use this function to read the heating installation's operating mode.

– **Standby**: The heating installation has no heat demand and is in standby.
– **Heat. mode**: The heating installation heats the living rooms to the **Desired heating temp.**.
– **Cooling**: The heating installation cools the living rooms to the **Desired cooling temp.**.
– **DHW**: The heating installation heats the domestic hot water in the cylinder to the desired temperature **Domestic hot water**.

Menu → Information → System status → Collector temp.

– You can use this function to read the current temperature on the collector temperature sensor.

Menu → Information → System status → Solar yield

– You can use this function to read the total solar yield.

Note the contents of the section Display for energy consumption and energy yield (→ Page 12).

Menu → Information → System status → Reset solar yield

– If you select the **Yes** setting in the **Reset solar yield** function and press the right-hand selection button **OK**, you reset the previously totalled solar yield to 0 kWh.

Menu → Information → System status → Environmental yield

– You can use this function to read the total environment yield.

Note the contents of the section Display for energy consumption and energy yield (→ Page 12).

Menu → Information → System status → Curr. room air hum.

– You can use this function to read the current room air humidity. The room air humidity sensor is installed in the system control.

Menu → Information → System status → Current dew point

– You can use this function to read the current dew point. The dew point indicates the temperature at which the water vapour in the air condenses and settles on objects.

Menu → Information → System status → triVAI

– You can use this function to read whether the heat pump or the back-up boiler (gas, oil or electricity) is currently covering the heat demand. The energy manager uses the **triVAI** and the comfort criteria to decide which heat generator to use.

If the value that is read is greater than 1, the heat pump is better at covering the heat demand than the back-up boiler.

Menu → Information → System status → Battery status

– You can use this function to read the battery's state of charge.

– **OK**: The battery has sufficient charge.
– **Critical**: The battery is almost flat.

Menu → Information → System status → Signal strength

– You can use this function to read how strong the radio link between the radio receiver unit and the system control is.

– 4: The radio link is within the acceptable range. If the reception strength is < 4, the radio link is not stable.
– 10: The radio link is highly stable.

5.1.1.2 ZONE1

Menu → Information → System status → Day temp. heating

– You can use this function to set the desired day temperature for the zone.

Day temp. heating is the temperature that you want to have in the rooms during the day or when you are at home.

Menu → Information → System status → Day temp. cooling

– You can use this function to set the desired day temperature for the zone.

Day temp. cooling is the temperature that you want to have in the rooms during the day or when you are at home.

Menu → Information → System status → Set-back temp. heat.

– You can use this function to set the desired set-back temperature for the zone.

Set-back temp. heat. is the temperature that you want to have in the rooms during the night or when you are away from home (night mode).

Menu → Information → System status → Room temperature

– If the system control is installed outside of the heat generator, you can read the current room temperature.

The system control has an integrated temperature sensor, which determines the room temperature.

5.1.1.3 Ventilation

Menu → Information → System status → Air quality sensor 1/2

– You can use this function to read the measured values from the air quality sensor.

Menu → Information → System status → Exhaust air humidity

– You can use this function to read the exhaust air humidity in the ventilation unit's ventilation shaft.

5.1.2 Display of energy consumption and energy yield

In the display and in the app that can also be used, the control displays values for the energy consumption and/or the energy yield.

The control displays an estimation of the values for the installation. Among other things, the values are influenced by the following:

– The installation/design of the heating installation
– User behaviour
– Seasonal environmental conditions
– Tolerances and components

External components, such as external heating pumps or valves, and other consumers and appliances in the household are still not taken into consideration.

The deviations between the energy consumption or energy yield that is displayed and the actual energy consumption or energy yield may be significant.

The specifications for the energy consumption or energy yield are not suitable to be used to create or compare energy billing.

5.1.2.1 Consumption

Some components do not support the calculation of consumption, the total of which is shown on the display. In the instructions for the components, you can find out if and how the individual components determine the consumption.

Menu → Information → Consumption → Current month → Heating → Electricity

– You can use this function to read the total electrical consumption for heating in the current month.

Menu → Information → Consumption → Current month → Heating → Fuel

– You can use this function to read the total fuel consumption in kWh for heating in the current month.

Menu → Information → Consumption → Current month → Hot water → Electricity

– You can use this function to read the total electrical consumption for hot water in the current month.

Menu → Information → Consumption → Current month → Hot water → Fuel

– You can use this function to read the total fuel consumption in kWh for hot water in the current month.

Menu → Information → Consumption → Last month → Heating → Electricity

– You can use this function to read the total electrical consumption for heating in the last month.

Menu → Information → Consumption → Last month → Heating → Fuel

– You can use this function to read the total fuel consumption in kWh for heating in the last month.

Menu → Information → Consumption → Last month → Hot water → Electricity

– You can use this function to read the total electrical consumption for hot water in the last month.

Menu → Information → Consumption → Last month → Hot water → Fuel

– You can use this function to read the total fuel consumption in kWh for hot water in the last month.

Menu → Information → Consumption → History → Heating → Electricity

– You can use this function to read the total electrical consumption for heating since start-up.

Menu → Information → Consumption → History → Heating → Fuel

– You can use this function to read the total fuel consumption in kWh for heating since start-up.

Menu → Information → Consumption → History → Hot water → Electricity

– You can use this function to read the total electrical consumption for hot water since start-up.

Menu → Information → Consumption → History → Hot water → Fuel

– You can use this function to read the total fuel consumption in kWh for hot water since start-up.

5.1.2.2 Diagram: Reading the solar yield

Menu → Information → Solar yield

– The diagram under **Solar yield** shows a comparison of the monthly solar yields between the previous and the current year.

The total yield is displayed on the bottom right. The highest value achieved in one month for the last two years is displayed in the top right.

5.1.2.3 Diagram: Reading the environmental yield

Menu → Information → Environmental yield

– The diagram under **Environmental yield** shows a comparison between the monthly environmental yields for the previous year and for the current year.

The total yield is displayed on the bottom right. The highest value achieved in one month for the last two years is displayed in the top right.

5.1.2.4 Diagram: Reading the electrical consumption

Menu → Information → Electrical consumption

– The diagram under **Electrical consumption** shows a comparison between the monthly consumption of electricity for the previous year and for the current year.

The total yield is displayed on the bottom right. The highest value achieved in one month for the last two years is displayed in the top right.

5.1.2.5 Diagram: Reading the fuel consumption

Menu → Information → Fuel consumption

– The diagram below **Fuel consumption** shows a comparison between the monthly fuel consumption for the previous year and for the current year.

The total yield is displayed on the bottom right. The highest value achieved in one month for the last two years is displayed in the top right.

5.1.2.6 Diagram: Reading the heat recovery yield

Menu → Information → Heat recovery

– The diagram under **Heat recovery** shows a comparison between the monthly heat recovery yield for the previous year and for the current year.

The total yield is displayed on the bottom right. The highest value achieved in one month for the last two years is displayed in the top right.

5.1.3 Read competent person contact details

Menu → Information → Contact details

– If the competent person entered their company name and telephone number when they installed the product, you can read this data under **Contact details**.

5.1.4 Reading the serial number and article number

Menu → Information → Serial number

– You can use this function to read the product's serial number. The article number is found in the second line.

5.2 Settings

5.2.1 Setting desired temperatures

This function is used to set the desired temperatures for the zone and hot water generation.

5.2.1.1 Zone

Menu → Desired temperatures → ZONE1

– You can set different desired temperatures for the zone:

Heating

– **Day temp. heating**: Set a comfortable room temperature in the living rooms.
– **Set-back temp. heat.**: Set a low room temperature at which the living rooms do not cool down.

Cooling

– **Day temp. cooling**: Set a comfortable room temperature in the living rooms.

5.2.1.2 Hot water generation

Danger!
Risk of death from legionella.

Legionella multiply at temperatures below 60 °C.

► Have a competent person inform you about the measures that should be taken to protect against Legionella in your installation.
► Do not set any water temperatures below 60 °C without consulting the competent person first.

Menu → Desired temperatures → Domestic hot water

– You can set the desired **Domestic hot water** temperature for the domestic hot water circuit.

If a heat pump is connected and you have set the desired temperature to above 55 °C, it may be the case that it is the back-up boiler that predominantly takes on the task of supplying domestic hot water.

5.2.2 Setting the ventilation level

Menu → Ventilation stage

– You can use this function to set how quickly the used room air is replaced with fresh outdoor air.

Max. vent. stage: Day: The ventilation guarantees quick exchange of air.

Max. vent. stge: Night: The ventilation guarantees a reduced air change.

5.2.3 Time programme

You can use the time programme to switch the system control between two implemented settings at specified times. To do this, create the required time periods in the time programme.

Setting the **Heating** time programme (→ Page 14)

Setting the **Cooling** time programme (→ Page 14)

Setting the domestic hot water circuit time programme (→ Page 14)

Setting the **Circulation** time programme (→ Page 14)

Setting the **Ventilation** time programme (→ Page 15)

Setting the **High tariff** time programme (→ Page 15)

You can create up to three time periods for each individual day and for predefined blocks (**Monday - Friday**, **Saturday - Sunday**, **Monday - Sunday**).

When entering time periods for individual days or blocks, the last information that was entered always applies.

If you have not set any time periods, the system control uses the time periods set in the factory settings.

Note
Once time programmes are set, they are retained even if there is a loss of voltage.

5.2.3.1 Heating operating mode example: Time period for a day

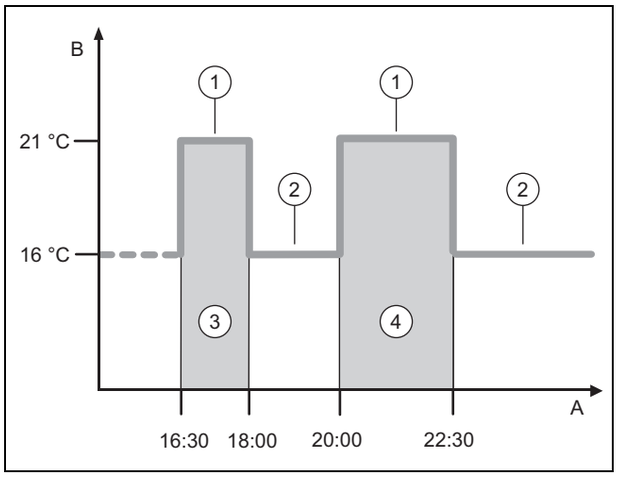

A	Time	2	**Set-back temp. heat.**
B	Temperature	3	Time period 1
1	**Day temp. heating**	4	Time period 2

You can specify the temperatures (**Day temp. heating** and **Set-back temp. heat.**) in the Setting the **Desired temperatures** (→ Page 13) function.

You can specify the times for the time periods in the Setting time programmes **Heating** (→ Page 14) function.

Day temp. heating: 21 °C

Set-back temp. heat.: 16 °C

Period 1: 16:30-18:00

Period 2: 20:00–22:30

Within the time periods, the system control maintains the room temperature at the set **Day temp. heating**.

Outside of the time periods, the system control maintains the room temperature at the set **Set-back temp. heat.**.

5.2.3.2 Setting time programmes quickly

If, for example, you require different time periods for just one working day in the week, first set the times for the entire block **Monday - Friday**. Then set the different time period for the working day.

5.2.3.3 Displaying and changing different times in the block

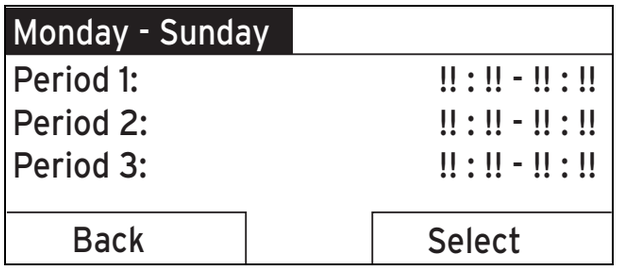

If you view a block in the display and have defined a different time period for a day in this block, the display indicates the time periods in the block with !!.

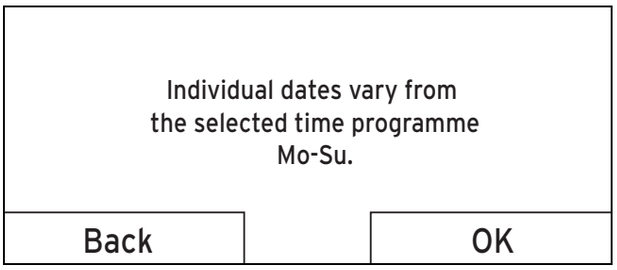

If you press the right-hand selection button **Select**, a message appears on the display which informs you about different time periods. You do not need to adjust the times.

You can use the right-hand selection button **OK** to display and change the set times for the block marked with !!.

5.2.3.4 Setting the Heating time programme

Menu → Time programmes → ZONE1

– The time programmes are only effective for the **Heating** operating mode in automatic mode. Within the time periods, the system control brings the temperature of the connected rooms to the set desired temperature **Day temp. heating**. Outside of these time periods, the system control switches to the operating mode that the competent person has set: **Eco** or **Set-back temp. heat.**. If the competent person has left the factory setting **Eco**, the system control switches off the heating function.

Setting the **Heating** operating mode. (→ Page 17)

5.2.3.5 Setting the Cooling time programme

Menu → Time programmes → ZONE1: **Cooling**

– The time programmes are only effective in the **Cooling** mode and the **Manual cooling** advanced function. In each set time period, the desired temperature that you set in the **Desired temperatures** function applies. Within the time periods, the zone cools the living areas to the desired **Day temp. cooling** temperature. Outside this time period, there is no cooling.

5.2.3.6 Setting the domestic hot water generation time programme

Menu → Time programmes → DHW circuit

– The time programmes are only effective for domestic hot water generation in automatic mode. In each set time period, the desired **Domestic hot water** temperature applies. At the end of a time period, the system control switches the domestic hot water generation off until the start of the next time period.

5.2.3.7 Setting the time programme Circulation

Menu → Time programmes → Circulation

– The time programmes are only effective for circulation in Automatic mode. The set time periods determine the operating times for circulation. Within the time period, the circulation is switched on. Outside the time period, the circulation is switched off.

5.2.3.8 Setting the Ventilation time programme

Menu → Time programmes → Ventilation

– The time programmes are only effective for ventilation in automatic mode. In each set time period, the ventilation level that you set in the **Ventilation** function applies. Within the time period, the system control regulates the ventilation unit to **Max. vent. stage: Day** as a maximum. Outside the time period, the system control regulates the ventilation unit to **Max. vent. stge: Night** as a maximum.

5.2.3.9 Setting the High tariff time programme

Menu → Time programmes → High tariff

– You can use this function to set when the high tariff or the low tariff should be used to calculate the costs.

Within the time period: For the high tariff

Outside of the time period: For the low tariff

The times of high tariff depend on your energy supply company.

If the energy supply company only offers one tariff, you do not need to set any time periods. The cost for the electricity is calculated using one tariff.

Setting costs (→ Page 16)

5.2.4 Days away from home scheduling

Menu → Days away from home scheduling

– You can use this function to set a period of time and a temperature for the days that you are away from home.

Heating installation operation during the set time period

– The domestic hot water is not being heated.
– The previously set temperature applies for all zones.
– The ventilation runs at the lowest ventilation level.
– The cooling is switched off.

While the **Days away from home scheduling** function is activated, it has priority over the set operating mode. At the end of the specified period, or if you cancel the function, the heating installation returns to the pre-set mode.

5.2.5 Day at home scheduling

Menu → Days at home scheduling

– In the specified period, the heating installation works in the **Automatic mode** mode and uses the day settings for **Sunday**, which were set using the **Time programmes** function. At the end of the specified period, or if you cancel the function, the heating installation returns to the pre-set mode.

5.2.6 Select language

Menu → Basic settings → Language

– You can use this function to change to the language that you want to appear in the display.

5.2.6.1 Setting your language

1. Press the left-hand selection button repeatedly until the basic display appears.
2. Press the left-hand selection button again.
3. Rotate the rotary knob clockwise until the dotted line appears.
4. Turn the rotary knob anti-clockwise until the second list entry above the dotted line is highlighted.
5. Press the right-hand selection button twice.
6. Turn the rotary knob until you find a language that you understand.
7. Press the right-hand selection button.

5.2.7 Setting the date and time

Note

If you disconnect the entire heating installation from the power supply, the time continues to run correctly for 30 minutes. You then have to reset the date and time.

5.2.7.1 Setting the date

Menu → Basic settings → Date/time → Date

– Select this function to set the current date. All functions that contain a date relate to the set date.

5.2.7.2 Setting the time

Menu → Basic settings → Date/time → Time

– Select this function to set the current time. All functions that contain a time relate to the set time.

5.2.8 Activating the automatic or manual change-over to daylight saving time

Menu → Basic settings → Date/time → Daylight saving time

– You can use this function to set whether the system control automatically changes over to daylight saving time, or whether you want to do this manually.

– **Auto**: The system control automatically changes over to daylight saving time. The system control uses Central European Summer Time: Start = last Sunday in March, end = last Sunday in October.
– **Manual**: You have to manually change over to daylight saving time.

If the outdoor temperature sensor is equipped with a DCF77 receiver, the time is changed over automatically. This **Daylight saving time** function is not used.

5.2.9 Set display contrast

Menu → Basic settings → Display → Display contrast

– You can use this function to set the display contrast in relation to the brightness of the surroundings to ensure that the display is clearly legible.

5.2.10 Activating Button lock

Menu → Basic settings → Display → Button lock

– You can use this function to activate the button lock. After one minute of not pressing any button or operating the

rotary knob, the button lock is active and you can no longer change any functions unintentionally.

Each time you actuate the system control, the following message appears in the display **Button lock active To unlock, press OK for 3 seconds**. If you press and hold the OK button for three seconds, the basic display appears and you can change functions. The button lock becomes active again if you do not press any button or operate the rotary knob for one minute.

To permanently remove the button lock, you must first release the button lock and then select the value **off** in the **Button lock** function.

5.2.11 Setting the preferred display

Menu → Basic settings → Display → Preferred display

– You can use this function to choose whether you see the data for heating, cooling or ventilation in the basic display.

5.2.12 Setting costs

You must specify all tariffs in the unit of currency per kWh for the calculation to be correct.

If the tariffs are in the unit of currency per m^3 for you, request that your energy supply company provides the required tariffs in the unit of currency per kWh.

If your energy supply company only offers one electricity tariff, enter the same value for the **High-tariff elec. rate** (→ Page 16) and **Low-tariff elec. rate** (→ Page 16) functions.

Round the tariff data up or down to one decimal point. To establish the factor that is to be set, multiply the value by 10.

Example:

	Costs	Factor to be set
Tariff for aux. heater (Gas, oil, electricity)	11.3 currency units/kWh	113
Low-tariff elec. rate (heat pump)	14.5 currency units/kWh	145
High-tariff elec. rate (heat pump)	18.7 currency units/kWh	187

5.2.12.1 Setting the tariff for the back-up boiler

Menu → Basic settings → Costs → Tariff for aux. heater

– The hybrid manager can use this function to correctly calculate the costs for the back-up boiler. To do this, the hybrid manager requires the factor that is to be set.

In order to enter the correct factor, you must request the tariff from your energy supply company and calculate the factor in accordance with the example.

5.2.12.2 Setting the low-tariff electricity rate

Menu → Basic settings → Costs → Low-tariff elec. rate

– The hybrid manager can use this function to correctly calculate the costs for the back-up boiler. To do this, the hybrid manager requires the factor that is to be set.

In order to enter the correct factor, you must request the tariff from your energy supply company and calculate the factor in accordance with the example.

5.2.12.3 Setting the high-tariff electricity rate

Menu → Basic settings → Costs → High-tariff elec. rate

– The hybrid manager can use this function to correctly calculate the costs for the back-up boiler. To do this, the hybrid manager requires the factor that is to be set.

In order to enter the correct factor, you must request the tariff from your energy supply company and calculate the factor in accordance with the example.

5.2.13 Set offset room temperature

Menu → Basic settings → Offset → Room temperature

– The system control can display the current room temperature if it is installed in a living room.

A thermometer is integrated in the system control for measuring the room temperature. You can use the offset to correct the measured temperature value.

5.2.14 Set offset outdoor temperature

Menu → Basic settings → Offset → Outside temperature

– The thermometer in the system control's outdoor temperature sensor measures the outdoor temperature. You can use the offset to correct the measured temperature value.

5.2.15 Changing a zone name

Menu → Basic settings → Enter zone name

– You can now modify the factory-specified zone names as you wish. The name is limited to 10 characters.

5.2.16 Activating Heat recovery

Menu → Basic settings → Ventilation → Heat recovery

– The **Heat recovery** function is set to **Auto**. This means that an internal control system checks whether heat recovery makes sense, or whether the outdoor air can be guided directly into the living room. For more information, see the operating instructions for **recoVAIR.../4** and later models.

If you have selected **Activate**, heat recovery is used constantly.

5.2.17 Setting the room air humidity

Menu → Basic settings → Max. room air humidity

– If the room air humidity exceeds the value set, a connected dehumidifier is activated. As soon as the value drops below the value that is set, the dehumidifier switches off again.

5.2.18 Resetting to default setting

You can reset the settings for the **Time programmes** or for **Everything** to the default setting.

Menu → Basic settings → Default setting → Time programmes

– With **Time programmes**, you reset all the settings you have made in the **Time programmes** function to the default setting. All other settings that include times, such as **Date/time**, are not affected.

While the system control is resetting the time programme settings to the default settings, **In progress** is shown on the display. The basic display is then shown on the display.

Caution.
Risk of a malfunction.

The **Default setting Everything** function restores all settings to the default settings, including those set by the competent person. It may be the case that it is no longer possible to operate the heating installation after this.

► Arrange for the competent person to reset all settings to factory settings.

Menu → Basic settings → Default setting → Everything

– While the system control is restoring the factory settings, **Reset to default setting In progress** is shown in the display. The installation assistant is then shown in the display; it must only be operated by a competent person.

5.2.19 Installer level

The Installer level is reserved for the competent person and is therefore protected by an access code. At this level, the competent person can implement the required settings.

5.3 Operating modes

The operating modes can be activated directly from any operating mode using the right-hand selection button **Op. mode**. If the heating installation is equipped with more than one zone, the activated operating mode only applies for the zone that was preset by the competent person.

If more than one zone is activated, you can set a separate operating mode for each zone using the left-hand selection button **Menu→ Basic settings**.

The path details given at the start of each operating mode description indicate how you reach this operating mode in the menu structure.

5.3.1 Setting the Heating operating mode

Op. mode → Heating

Menu → Basic settings → Operating mode → ZONE1 → Heating

– You can use this function to specify how the heating installation should operate during heating.

off: The zone is switched off in this operating mode and the frost protection function is activated.

Auto: The operating mode brings the zone to the desired temperature set for **Day temp. heating** in the time periods that you have set in the time programme.

Outside these time periods, the system control regulates the control behaviour set by the competent person.

– **Eco** The heating function is switched off and the system control monitors the outdoor temperature. If the outdoor temperature falls below 3 °C, the system control switches the heating function on after the end of the frost protection delay time and brings the room temperature to the set desired temperature **Set-back temp. heat.**. Despite the heating function being activated, the burner is only active on demand. If the outdoor temperature rises above 4 °C, the system control switches the heating function off, but continues to monitor the outdoor temperature.
– **Set-back**: The heating function is switched on and the system control brings the room temperature to the set desired temperature **Set-back temp. heat.**.

Day: The operating mode brings the zone to the desired temperature **Day temp. heating**, regardless of the time periods that you have set in the time programme.

Set-back: The operating mode brings the zone to the desired temperature **Set-back temp. heat.**, regardless of the time periods that you have set in the time programme.

5.3.2 Setting the Cooling operating mode

Op. mode → Cooling

Menu → Basic settings → Operating mode → ZONE1 → Cooling

– You can use this function to specify how the heating installation should operate during cooling.

off: The zone is switched off in this operating mode.

Auto: The operating mode brings the zone to the desired temperature **Day temp. cooling** in the time periods that you have set in the time programme. Outside these time periods, the **Cooling** function is switched off.

Day: The operating mode brings the zone to the desired temperature set for **Day temp. cooling**, regardless of the time periods that you have set in the time programme.

5.3.3 Setting the Ventilation operating mode

The operating instructions for the ventilation unit explain how the ventilation unit works with the ventilation levels.

Op. mode → Ventilation

– You can use this function to define how the ventilation unit operates during ventilation.

Auto: The operating mode controls the air exchange via the set ventilation level **Max. vent. stage: Day** in the set time periods that you have defined in the time programme. The set ventilation level **Max. vent. stge: Night** is effective outside of the time periods.

If air-quality sensors are connected to the ventilation unit, the ventilation unit varies the ventilation levels:

– If the air quality is good, the ventilation unit works at a lower ventilation level than the one that is set.
– If the air quality is poor, the ventilation unit works at a higher ventilation level. However, the ventilation unit cannot exceed the **Max. vent. stage: Day** and **Max. vent. stge: Night** ventilation levels that are set.

Day: The operating mode constantly controls the exchange of air using the value that you set in the **Max. vent. stage: Day** ventilation level.

Set-back: The operating mode constantly controls the exchange of air using the value that you set in the **Max. vent. stge: Night** ventilation level.

5.3.4 Setting the operating mode for domestic hot water generation

Op. mode → Domestic hot water

– You can use this function to specify how the heating installation should operate during domestic hot water generation.

off: Domestic hot water generation is switched off and the frost protection function is activated.

Auto: The operating mode brings the domestic hot water generation to the desired temperature set for **Domestic hot water** in the time periods that you have set in the time programme.

Day: The operating mode brings the domestic hot water generation to the desired temperature set for **Domestic hot water**, regardless of the time periods that you have set in the time programme.

5.3.5 Operating mode for circulation

The operating mode for circulation always corresponds to the operating mode for hot water. You cannot set a different operating mode.

5.4 Advanced functions

The advanced functions can be activated directly from any operating mode using the right-hand selection button **Op. mode**. If the heating installation is equipped with more than one zone, the activated advanced function only applies for the zone that was preset by the competent person.

If more than one zone is activated, you can set a separate advanced function for each zone using the left-hand selection button **Menu → Basic settings**.

The path details given at the start of each advanced function description indicate how you can access this advanced function in the menu structure.

5.4.1 Activating manual cooling

Op. mode → Manual cooling

– If the outdoor temperature is high, you can activate the **Manual cooling** advanced function. You define for how many days you want to activate the advanced function. If you activate **Manual cooling**, you cannot use the heating function at the same time. The **Manual cooling** function takes priority over the heating function.

The setting applies for as long as the advanced function is active. The advanced function is deactivated if the days that are set have elapsed or if the outdoor temperature falls below 4 °C.

If you want to set the temperature separately for more than one zone, you can set these temperatures using the **Desired temperatures** function.

5.4.2 Activating 1 day at home

Op. mode → 1 day at home

Menu → Basic settings → Operating mode → ZONE1 → 1 day at home

– The **1 day at home** advanced function activates the automatic mode in the operating mode **Heating** with the settings for the **Sunday**.

The advanced function is automatically deactivated after 00:00 (midnight) or you can cancel the advanced function first. The heating installation then returns to the pre-set operating mode.

5.4.3 Activating 1 day away from home

Op. mode → 1 day away from home

Menu → Basic settings → Operating mode → ZONE1 → 1 day away from home

– The **1 day away from home** advanced function brings the room temperature to the desired **Set-back** temperature.

Domestic hot water generation and circulation are switched off and the frost protection is activated.

Ventilation is activated and works at the lowest ventilation level.

The advanced function is automatically deactivated after 00:00 (midnight) or you can cancel the advanced function first. The heating installation then returns to the pre-set operating mode.

5.4.4 Activating Ventilation boost

Op. mode → Ventilation boost

Menu → Basic settings → Operating mode → ZONE1 → Ventilation boost

– This **Ventilation boost** advanced function switches the zone off for 30 minutes.

The frost protection function is activated, and domestic hot water generation and circulation remain active.

Ventilation is activated and works at the highest ventilation level.

The advanced function is automatically deactivated after 30 minutes or you can cancel the advanced function first. The heating installation will then return to the pre-set operating mode.

5.4.5 Activating Party function

Op. mode → Party function

Menu → Basic settings → Operating mode → ZONE1 → Party function

– The advanced function regulates the room temperature to the desired **Day** temperature, the domestic hot water to the desired **Domestic hot water** temperature and the ventilation to ventilation level **Max. vent. stage: Day** in accordance with the set time periods. The circulation is activated.

The advanced function is automatically deactivated after six hours or you can cancel the advanced function first. The heating installation will then return to the pre-set operating mode.

5.4.6 Activating Cylinder boost

Op. mode → Cylinder boost

– The **Cylinder boost** advanced function heats the water in the domestic hot water cylinder until it reaches the set desired temperature **Domestic hot water**.

The advanced function is active for one hour unless you cancel it sooner. The heating installation then returns to the pre-set operating mode.

5.4.7 Activating System OFF active

Op. mode → System OFF active

– The **System OFF active** advanced function switches off the heating function, the domestic hot water circuit, the circulation and the cooling. The frost protection function is activated.

Ventilation is activated and works at the lowest ventilation level.

The advanced function is deactivated by cancelling the advanced function. The heating installation will then return to the pre-set mode.

5.5 Messages

5.5.1 Maintenance message

Maintenance messages (→ Appendix C)

If maintenance is required, the system control displays a maintenance message in the display.

To prevent the heating installation from breaking down and to prevent damage, you must pay attention to the maintenance message:

► Observe the operating instructions for the unit shown.
► Only carry out the maintenance instructions that are described in the operating instructions for the unit shown.
► For all other maintenance instructions, inform the competent person.

5.5.2 Fault message

Fault messages (→ Appendix B)

A fault message with fault code (e.g. F.33) and the affected heat generator appear in the system control's display.

► Press the **Reset** selection button.
  – **Heat generator fault clearance?** appears in the display.
► Press the **OK** selection button.
  – **Faults are cleared for the heat generator** briefly appears in the display.
► If the fault persists, inform the competent person.

If you would like to see the basic display on the display again, press the left-hand selection button **Back**.

You can read the current fault messages under **Menu → Information → System status → Fault status**. As soon as a fault message occurs for the heating installation, the setting level displays the value **Fault list**. The right-hand selection button has been assigned the **Display** function.

6 Troubleshooting

Overview of fault messages (→ Appendix B)

6.1 Implementing the setting if the heat pump fails

If the fault message **Restricted operation/ comfort protection Inactive** appears on the display, the heat pump has failed and the system control enters limp home mode. The back-up boiler now supplies the heating installation with heating energy. During installation, the competent person has restricted the temperature for limp home mode. You can feel that the domestic hot water and heating are not becoming very hot.

While you wait for the competent person to come, you can use the rotary knob to implement the following settings:

Inactive: The system control works in limp home mode; heating and domestic hot water become moderately hot.

Heating: The back-up boiler takes over the heating mode; the heating becomes hot, the domestic hot water is cold.

DHW: The back-up boiler takes over the domestic hot water mode; the domestic hot water becomes hot, the heating is cold.

DHW+heat.: The back-up boiler takes over the heating and domestic hot water mode; the heating and the domestic hot water become hot.

The back-up boiler is not as efficient as the heat pump, meaning that using only the back-up boiler to generate heat is expensive.

If you want to implement settings on the system control, click **Back** and the basic display appears in the display. After five minutes of no operation, the fault message appears again in the display.

6.2 Cleaning the outdoor temperature sensor

► Clean the solar cell with a damp cloth and a little solvent-free soap. Do not use sprays, scouring agents, detergents, solvents or cleaning agents that contain chlorine.

Note
After you have cleaned the solar cell, there is a delay before the fault message disappears because the battery has to be recharged first.

6.3 Changing the batteries

Danger!
Risk of death caused by unsuitable batteries!

If batteries are replaced with the wrong type of battery, there is a risk of explosion.

► Ensure that you use the correct battery type when replacing batteries.
► Dispose of used batteries in accordance with the instructions in this manual.

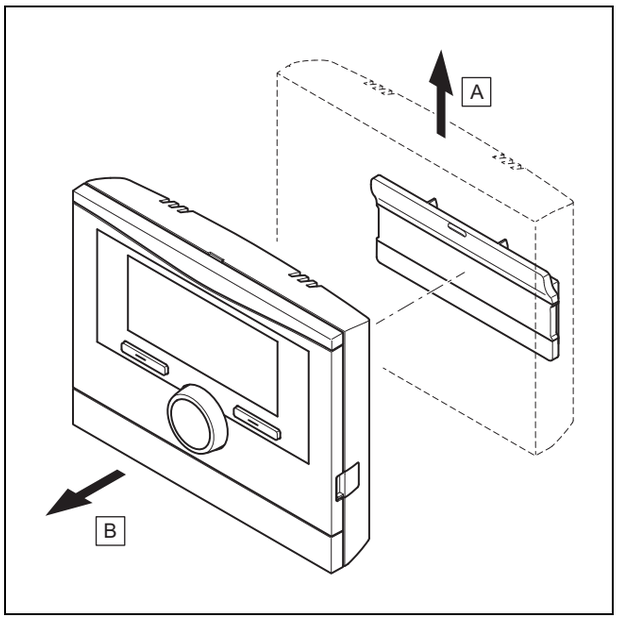

1. Remove the system control from the unit mounting bracket as shown in the figure.

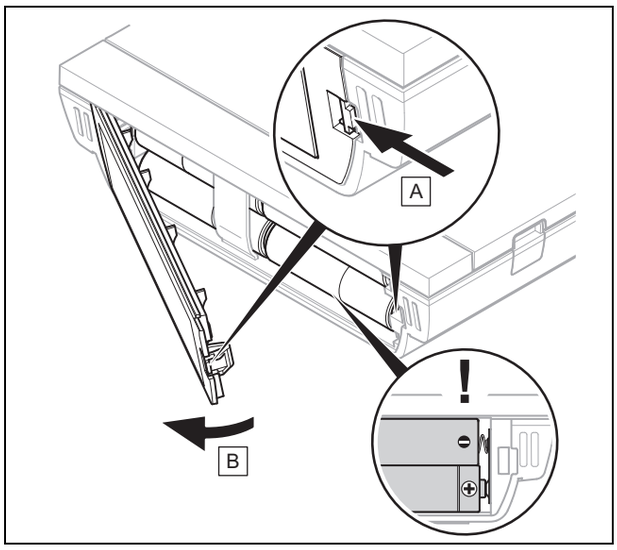

2. Open the battery compartment as shown in the figure.
3. Always change all the batteries at the same time.
   – Only use LR06 batteries
   – Do not use rechargeable batteries
   – Do not combine the batteries with other battery types
   – Do not combine new and used batteries
4. Insert the batteries, making sure that the poles are the right way round.
5. Do not short-circuit the connection contacts.
6. Close the battery compartment.

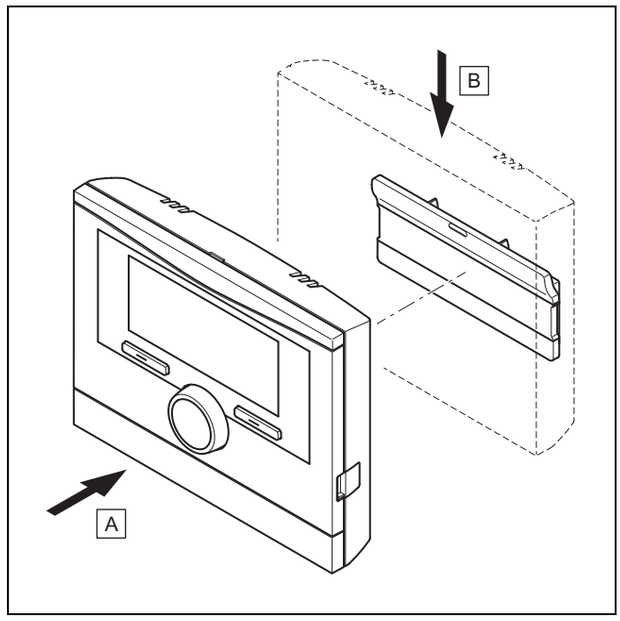

7. Clip the system control into the unit mounting bracket as shown in the figure, making sure that it clicks into place.

7 Care

7.1 Caring for the product

- ► Clean the casing with a damp cloth and a little solvent-free soap.
- ► Do not use sprays, scouring agents, detergents, solvents or cleaning agents that contain chlorine.

8 Decommissioning

8.1 Decommissioning the product

If you want to replace or remove the product, you must decommission the heating installation.

- ► This work should be carried out by a competent person.
- ► Remove the batteries if you intend to store the product and not use it for an extended period.

8.2 Recycling and disposal

- ► The competent person who installed your product is responsible for the disposal of the packaging.


If the product is labelled with this mark:

- ► In this case, do not dispose of the product with the household waste.
- ► Instead, hand in the product to a collection centre for waste electronic or electrical equipment.


If the product contains batteries that are labelled with this mark, these batteries may contain substances that are hazardous to human health and the environment.

► In this case, dispose of the batteries at a collection point for batteries.

9 Guarantee and customer service

9.1 Guarantee

Applicability: Belgium

Die N.V. VAILLANT gewährleistet eine Garantie von 2 Jahren auf alle Material- und Konstruktionsfehler ihrer Produkte ab dem Rechnungsdatum.

Die Garantie wird nur gewährt, wenn folgende Voraussetzungen erfüllt sind:

1. Das Gerät muss von einem qualifizierten Fachmann installiert worden sein. Dieser ist dafür verantwortlich, dass alle geltenden Normen und Richtlinien bei der Installation beachtet wurden.
2. Während der Garantiezeit ist nur der Vaillant Werkskundendienst autorisiert, Reparaturen oder Veränderungen am Gerät vorzunehmen. Die Werksgarantie erlischt, wenn in das Gerät Teile eingebaut werden, die nicht von Vaillant zugelassen sind.
3. Damit die Garantie wirksam werden kann, muss die Garantiekarte vollständig und ordnungsgemäß ausgefüllt, unterschrieben und ausreichend frankiert spätestens fünfzehn Tage nach der Installation an uns zurückgeschickt werden.

Während der Garantiezeit an dem Gerät festgestellte Material- oder Fabrikationsfehler werden von unserem Werkskundendienst kostenlos behoben. Für Fehler, die nicht auf den genannten Ursachen beruhen, z. B. Fehler aufgrund unsachgemäßer Installation oder vorschriftswidriger Behandlung, bei Verstoß gegen die geltenden Normen und Richtlinien zur Installation, zum Aufstellraum oder zur Belüftung, bei Überlastung, Frosteinwirkung oder normalem Verschleiß oder bei Gewalteinwirkung übernehmen wir keine Haftung. Wenn eine Rechnung gemäß den allgemeinen Bedingungen des Werkvertrags ausgestellt wird, wird diese ohne vorherige schriftliche Vereinbarung mit Dritten (z. B. Eigentümer, Vermieter, Verwalter etc.) an den Auftraggeber oder/und den Benutzer der Anlage gerichtet; dieser übernimmt die Zahlungsverpflichtung. Der Rechnungsbetrag ist dem Techniker des Werkskundendienstes, der die Leistung erbracht hat, zu erstatten. Die Reparatur oder der Austausch von Teilen während der Garantie verlängert die Garantiezeit nicht. Nicht umfasst von der Werksgarantie sind Ansprüche, die über die kostenlose Fehlerbeseitigung hinausgehen, wie z. B. Ansprüche auf Schadenersatz. Gerichtsstand ist der Sitz unseres Unternehmens. Um alle Funktionen des Vaillant Geräts auf Dauer sicherzustellen und um den zugelassenen Serienzustand nicht zu verändern, dürfen bei Wartungs- und Instandhaltungsarbeiten nur Original Vaillant Ersatzteile verwendet werden!

Applicability: Switzerland

Werksgarantie gewähren wir nur bei Installation durch einen anerkannten Fachhandwerksbetrieb. Dem Eigentümer des Geräts räumen wir eine Werksgarantie entsprechend den landesspezifischen Vaillant Geschäftsbedingungen und den entsprechend abgeschlossenen Wartungsverträgen ein. Garantiearbeiten werden grundsätzlich nur von unserem Werkskundendienst ausgeführt.

Applicability: Germany
OR Austria

Herstellergarantie gewähren wir nur bei Installation durch einen anerkannten Fachhandwerksbetrieb.

Dem Eigentümer des Geräts räumen wir diese Herstellergarantie entsprechend den Vaillant Garantiebedingungen ein. Garantiearbeiten werden grundsätzlich nur von unserem Kundendienst ausgeführt. Wir können Ihnen daher etwaige Kosten, die Ihnen bei der Durchführung von Arbeiten an dem Gerät während der Garantiezeit entstehen, nur dann erstatten, falls wir Ihnen einen entsprechenden Auftrag erteilt haben und es sich um einen Garantiefall handelt.

9.2 Customer service

Applicability: Austria

Vaillant Group Austria GmbH
Clemens-Holzmeister-Straße 6
1100 Wien
Österreich

E-Mail Kundendienst: termin@vaillant.at

Internet Kundendienst: http://www.vaillant.at/werkskundendienst/

Telefon: 05 7050-2100 (zum Regionaltarif österreichweit, bei Anrufen aus dem Mobilfunknetz ggf. abweichende Tarife - nähere Information erhalten Sie bei Ihrem Mobilnetzbetreiber)

Der flächendeckende Kundendienst für ganz Österreich ist täglich von 0 bis 24 Uhr erreichbar. Vaillant Kundendiensttechniker sind 365 Tage für Sie unterwegs, sonn- und feiertags, österreichweit.

Applicability: Belgium

N.V. Vaillant S.A.
Golden Hopestraat 15
B-1620 Drogenbos
Belgien, Belgique, België

Kundendienst / Service après-vente / Klantendienst:
2 3349352

Applicability: Switzerland

Vaillant GmbH (Schweiz, Suisse, Svizzera)
Riedstrasse 12
CH-8953 Dietikon
Schweiz, Svizzera, Suisse

Kundendienst: 044 74429-29

Techn. Vertriebssupport: 044 74429-19

Applicability: Germany

Auftragsannahme Vaillant Kundendienst: 021 91 5767901

10 Technical data

10.1 Product data in accordance with EU Ordinance no. 811/2013, 812/2013

On units with integrated weather compensators, including a room thermostat function that can be activated, the seasonal room-heating efficiency always includes the correction factor for controller technology class VI. The seasonal room-heating efficiency may deviate if this function is deactivated.

Temperature control class	VI
Contribution to the seasonal room-heating energy efficiency ηs	4.0 %

Appendix

A Overview of the operating and display functions

Note
The functions and operating modes listed are not available for all system configurations.

A.1 Operating modes

Operating mode	Setting	Default setting
Operating mode		
Heating	**off**, **Auto**, **Day**, **Set-back**	**Auto**
Cooling	**off**, **Auto**, **Day**	**Auto**
Ventilation	**Auto**, **Day**, **Set-back**	**Auto**
Domestic hot water	**off**, **Auto**, **Day**	**Auto**
Advanced functions		
Manual cooling	**active**	–
1 day at home	**active**	–
1 day away from home	**active**	–
Ventilation boost	**active**	–
Party function	**active**	–
Cylinder boost	**active**	–
System OFF active	**active**	–

A.2 End user level

The description of the functions for **ZONE1** also applies for all available zones.

Setting level	Values		Unit	Increment, select	Default setting
	Min.	Max.			
Information → System status →					
System ----					
Fault status	Current value			**No fault**, **Fault list**	
Green IQ				**Off**, **On**	**On**
Water pressure	Current value		bar		
System status	Current value			**Standby**, **Heat. mode**, **Cooling**, **DHW**	
Burner	Current value			**On**, **off**	
Collector temp.	Current value		°C		
Solar yield	Current value		kWh		
Reset solar yield				**Yes**, **No**	**No**
Environmental yield	Current value		kWh		
Curr. room air hum.	Current value		%		
Current dew point	Current value		°C		
triVAI	Current value				
Battery status	Current value			**Critical**, **OK**	
Signal strength	Current value			1	
ZONE1 ----					
Day temp. heating	5	30	°C	0.5	20
Day temp. cooling	15	30	°C	0.5	24
Set-back temp. heat.	5	30	°C	0.5	15
Room temperature	Current value		°C		
Ventilation ----					

Setting level	Values		Unit	Increment, select	Default setting
	Min.	Max.			
Air quality sensor 1	Current value		ppm		
Air quality sensor 2	Current value		ppm		
Exhaust air humidity	Current value		%rel		
Information → Consumption → Current month →					
Heating ----					
Electricity	Total value for the current month		kWh		
Fuel	Total value for the current month		kWh		
Hot water ----					
Electricity	Total value for the current month		kWh		
Fuel	Total value for the current month		kWh		
Information → Consumption → Last month →					
Heating ----					
Electricity	Total value for the last month		kWh		
Fuel	Total value for the last month		kWh		
Hot water ----					
Electricity	Total value since start-up		kWh		
Fuel	Total value since start-up		kWh		
Information → Consumption → History →					
Heating ----					
Electricity	Total value since start-up		kWh		
Fuel	Total value since start-up		kWh		
Hot water ----					
Electricity	Total value since start-up		kWh		
Fuel	Total value since start-up		kWh		
Information → Solar yield →					
Bar chart	Previous year to current year comparison		kWh/month		
Information → Environmental yield →					
Bar chart	Previous year to current year comparison		kWh/month		
Information → Electrical consumption →					
Bar chart	Previous year to current year comparison		kWh/month		
Information → Fuel consumption →					

Setting level	Values		Unit	Increment, select	Default setting
	Min.	Max.			
Bar chart	Previous year to current year comparison		kWh/month		
Information → Heat recovery →					
Bar chart	Previous year to current year comparison		kWh/month		
Information → Contact details →					
Installer Phone number	Current values				
Information → Serial number					
Product number	Permanent value				
Desired temperatures → ZONE1 →					
Day temp. heating	5	30	°C	0.5	20
Day temp. cooling	15	30	°C	0.5	24
Set-back temp. heat.	5	30	°C	0.5	15
Desired temperatures → Domestic hot water →					
Domestic hot water	35	70	°C	1	60
Ventilation stage →					
Max. vent. stage: Day	Depending on the ventilation unit			1	Depending on the ventilation unit
Max. vent. stge: Night	Depending on the ventilation unit			1	Depending on the ventilation unit
Time programmes → ZONE1 (Heating) → **Time programmes → ZONE1**: **Cooling →** **Time programmes → Circulation →** **Time programmes → Ventilation →**					
Individual days and blocks				**Monday**, **Tuesday**, **Wednesday**, **Thursday**, **Friday**, **Saturday**, **Sunday** and **Monday - Friday**, **Saturday - Sunday**, **Monday - Sunday**	Mo - Fr: 06:00-22:00 Sa: 07:30-23:30 Su: 07:30-22:00
Period 1: Start – End **Period 2:** Start – End **Period 3:** Start – End	00:00	24:00	h:min	00:10	
Time programmes → Domestic hot water →					
Individual days and blocks				**Monday**, **Tuesday**, **Wednesday**, **Thursday**, **Friday**, **Saturday**, **Sunday** and **Monday - Friday**, **Saturday - Sunday**, **Monday - Sunday**	Mo to Fr: 05:30-22:00 Sa: 07:00-23:30 Su: 07.00-22.00
Period 1: Start – End **Period 2:** Start – End **Period 3:** Start – End	00:00	24:00	h:min	00:10	
Time programmes → Noise reduction operation →					

Setting level	Values		Unit	Increment, select	Default setting
	Min.	Max.			
Individual days and blocks				**Monday**, **Tuesday**, **Wednesday**, **Thursday**, **Friday**, **Saturday**, **Sunday** and **Monday - Friday**, **Saturday - Sunday**, **Monday - Sunday**	Mon – Sun: 00:00-00:00
Period 1: Start – End **Period 2:** Start – End **Period 3:** Start – End	00:00	24:00	h:min	00:10	
Time programmes → High tariff →					
Individual days and blocks				**Monday**, **Tuesday**, **Wednesday**, **Thursday**, **Friday**, **Saturday**, **Sunday** and **Monday - Friday**, **Saturday - Sunday**, **Monday - Sunday**	Mo - Su: 11:00-13:00
Period 1: Start – End **Period 2:** Start – End **Period 3:** Start – End	00:00	24:00	h:min	00:10	
Days away from home scheduling →					
Start	01.01.01	31.12.99	dd.mm.yy	Day.Month.Year	01.01.14
End	01.01.01	31.12.99	dd.mm.yy	Day.Month.Year	01.01.14
Temperature	5	30	°C	1	15
Days at home scheduling →					
Start	01.01.01	31.12.99	dd.mm.yy	Day.Month.Year	01.01.14
End	01.01.01	31.12.99	dd.mm.yy	Day.Month.Year	01.01.14
Basic settings → Language →					
				Selectable language	**English**
Basic settings → Date/time →					
Date	01.01.01	31.12.99	dd.mm.yy	Day.Month.Year	01.01.15
Time	00:00	23:59	h:min	00:10	08:00
Daylight saving time				**Manual**, **Auto**	**Manual**
Basic settings → Display →					
Display contrast	1	15		1	9
Button lock				**off**, **On**	**off**
Preferred display				**Heating**, **Cooling**, **Vent.**	**Heating**
Basic settings → Costs →					
Tariff for aux. heater	1	999		1	12
Low-tariff elec. rate	1	999		1	16
High-tariff elec. rate	1	999		1	20
Basic settings → Offset →					
Room temperature	-3.0	3.0	K	0.5	0.0
Outside temperature	-3.0	3.0	K	0.5	0.0
Basic settings → Operating mode → ZONE1 →					
Heating				**off**, **Auto**, **Day**, **Set-back**	**Auto**

Setting level	Values		Unit	Increment, select	Default setting
	Min.	Max.			
Cooling				**off**, **Auto**, **Day**	**Auto**
1 day at home				Active, Not active	Not active
1 day away from home				Active, Not active	Not active
Ventilation boost				Active, Not active	Not active
Party function				Active, Not active	Not active
Basic settings → Enter zone name →					
ZONE1	1	10	Let-ter/number	A to Z, 0 to 9, space	**ZONE1**
Basic settings → Ventilation →					
Heat recovery				**Auto**, **Activate**, **off**	**Auto**
Basic settings → Max. room air humidity →					
Max. room air hum.	30	70	%rel	1	40
Basic settings → Default setting →					
Time programmes				**Yes**, **No**	**No**
Everything				**Yes**, **No**	**No**
Installer level →					
Enter code	000	999		1	000

B Troubleshooting

Symptom	Possible cause	Measure
Display remains dark	The batteries are flat	1. Change all the batteries. (→ Page 19) 2. If the fault persists, inform the competent person.
No changes in the display when the rotary knob is turned	Software error	1. Take all the batteries out. 2. Insert the batteries in the battery compartment, making sure that the poles are the right way round. 3. If the fault persists, inform the competent person.
No changes in the display via the selection buttons are pressed	Software error	1. Take all the batteries out. 2. Insert the batteries in the battery compartment, making sure that the poles are the right way round. 3. If the fault persists, inform the competent person.
Display view: **No RF communication**	The reception strength is too weak	1. Take the system control to the radio receiver unit and see if the reception strength increases. 2. If the reception strength is greater than 4, have the competent person install the system control in a different location. 3. If the reception strength when directly next to the radio receiver unit is less than 4, switch off the mains switch for all the heat generators and then wait approximately 1 minute before switching it back on. 4. If the fault persists, inform the competent person.
Display view: **Button lock active To unlock, press OK for 3 seconds**, it is not possible to change the settings or values	Button lock is active	1. If you would like to change any of the values, follow the instructions on the display. 2. Also read through the **Button lock** Activate (→ Page 15) function.
Display view: **Restricted operation/ comfort protection**, insufficient heating up of the heating and the domestic hot water	Heat pump does not work	1. Inform the competent person. 2. Select the setting for limp home mode until the competent person arrives. 3. To do this, read through the Implementing the setting when the heat pump fails (→ Page 19) function.

Symptom	Possible cause	Measure
Display view: **Fault F. Fault: Heat generator 1**, the specific fault code (e.g. F.33) and the specific heat generator appear behind F. in the display	Heat generator faults	1. Carry out a **Reset** fault message (→ Page 19). 2. If the fault persists, inform the competent person.
Display view: **Change batteries**	The batteries are almost flat	1. Change all the batteries. (→ Page 19) 2. If the fault persists, inform the competent person.
Display view: **Clean outside temperature sensor**	The battery in the outdoor temperature sensor is flat	1. Cleaning the outdoor temperature sensor (→ Page 19). 2. If the fault persists, inform the competent person.

C Maintenance messages

The maintenance message **Service heat pump 1** is an example of a maintenance message that may appear for heat pumps 1 to 6.

The maintenance message **Service heat generator 1** is an example of a maintenance message that may appear for heat generators 1 to 6.

#	Message	Description	Maintenance work	Interval	
1	**Service heat pump 1**	The heat pump requires maintenance work.	Refer to the operating instructions of the relevant heat pump for information on the maintenance work required	See the operating instructions for the heat pump	
2	**Service heat generator 1**	The heat generator requires maintenance work.	Refer to the operating instructions of the relevant heat generator for information on the maintenance work required	See the operating instructions for the heat generator	
3	**Service ventilation unit**	The ventilation unit requires maintenance work.	Refer to the operating instructions of the ventilation unit for information on the maintenance work required	See the operating instructions for the ventilation unit	
4	**Service date Next service on**	The competent person has entered a date on which maintenance is due for the heating installation.	Inform the competent person if maintenance work is required	Date entered in the system control	

Index

Index

0020237615_02

0020237615_02 ▮ 11.01.2018

Supplier

Vaillant Deutschland GmbH & Co.KG
Berghauser Str. 40 ▮ D-42859 Remscheid
Telefon 021 91 18-0 ▮ Telefax 021 91 18-2810
Auftragsannahme Vaillant Kundendienst 021 91 5767901
info@vaillant.de ▮ www.vaillant.de

Vaillant Group Austria GmbH
Clemens-Holzmeister-Straße 6 ▮ 1100 Wien
Telefon 05 7050 ▮ Telefax 05 7050-1199
Telefon 05 7050-2100 (zum Regionaltarif österreichweit, bei Anrufen aus dem Mobilfunknetz ggf. abweichende Tarife - nähere Information erhalten Sie bei Ihrem Mobilnetzbetreiber)
info@vaillant.at ▮ termin@vaillant.at
www.vaillant.at ▮ www.vaillant.at/werkskundendienst/

Vaillant GmbH (Schweiz, Suisse, Svizzera)
Riedstrasse 12 ▮ CH-8953 Dietikon
Tel. 044 74429-29 ▮ Fax 044 74429-28
Kundendienst 044 74429-29 ▮ Techn. Vertriebssupport 044 74429-19
info@vaillant.ch ▮ www.vaillant.ch

N.V. Vaillant S.A.
Golden Hopestraat 15 ▮ B-1620 Drogenbos
Tel. 2 3349300 ▮ Fax 2 3349319
Kundendienst / Service après-vente / Klantendienst 2 3349352
info@vaillant.be ▮ www.vaillant.be